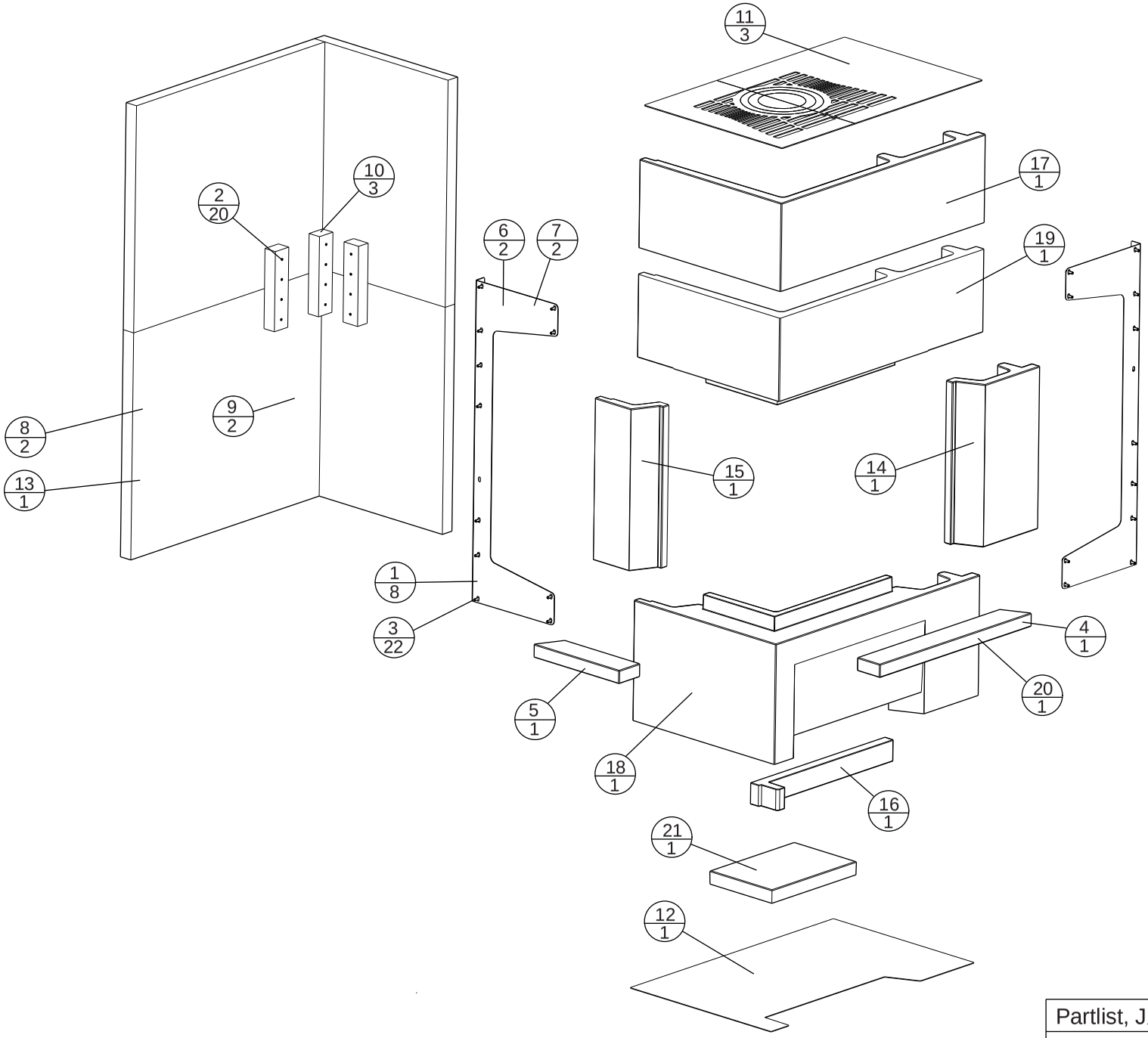

XX - Position number
YY - Quantity

Partlist, Jøtul S 71/72		
Jøtul AS Fredrikstad, Norway	Draw. no: Sheet 2/2 900179 - P00	Date: 02.03.2015